ICEM — CFD MESHING

Cylinder Mesh photos

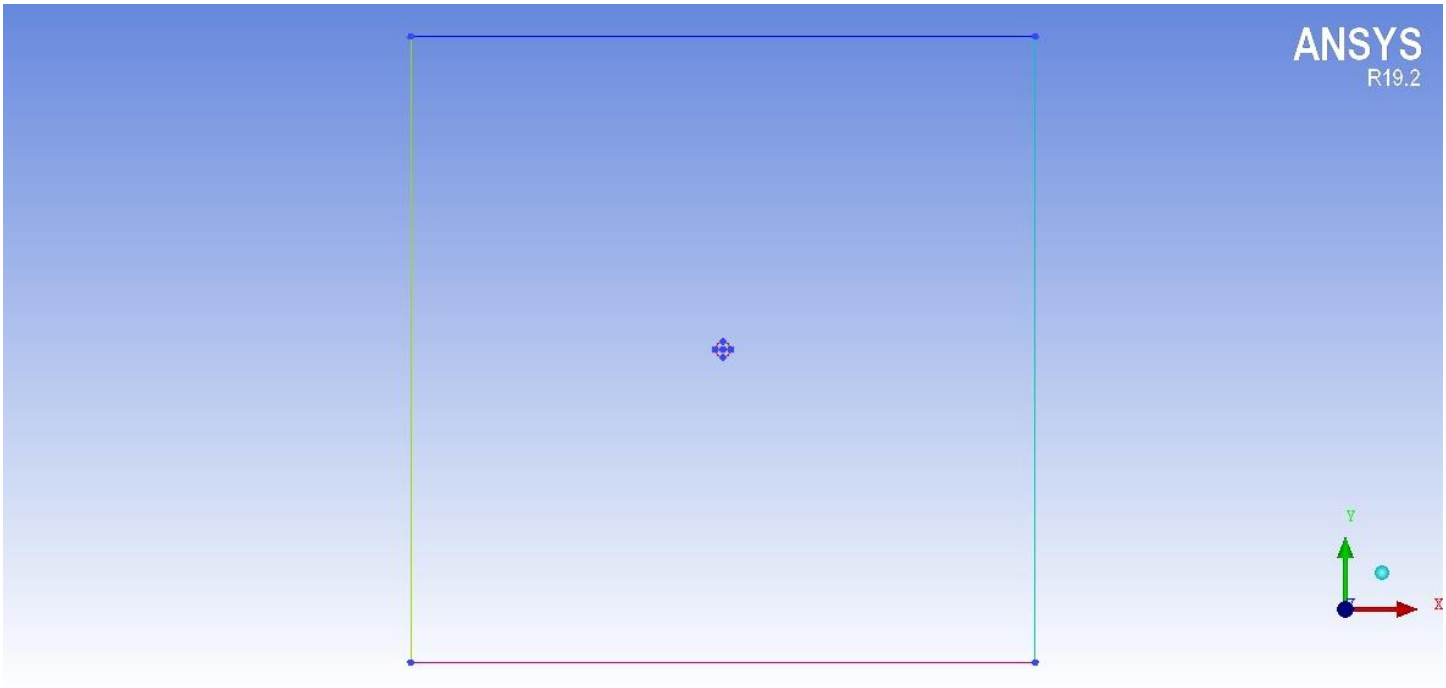

Initial view

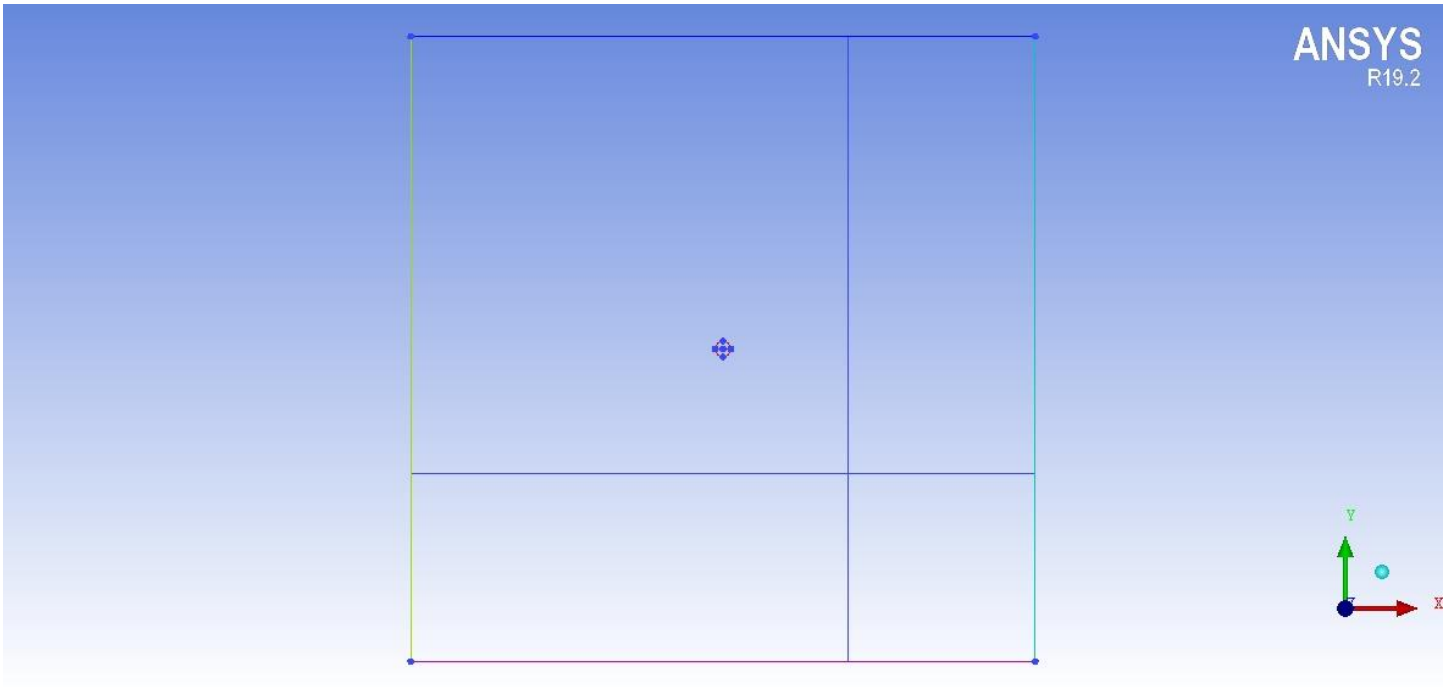

Surface View

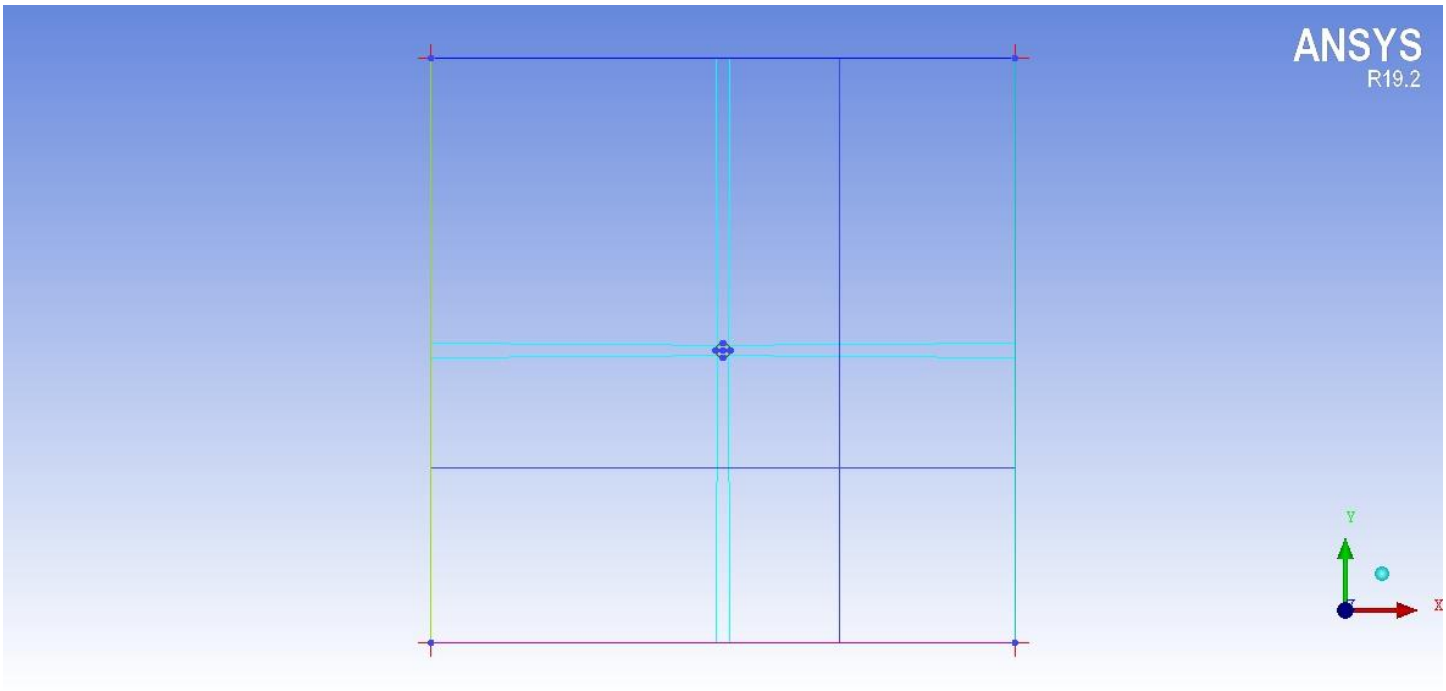

Association View With Curves

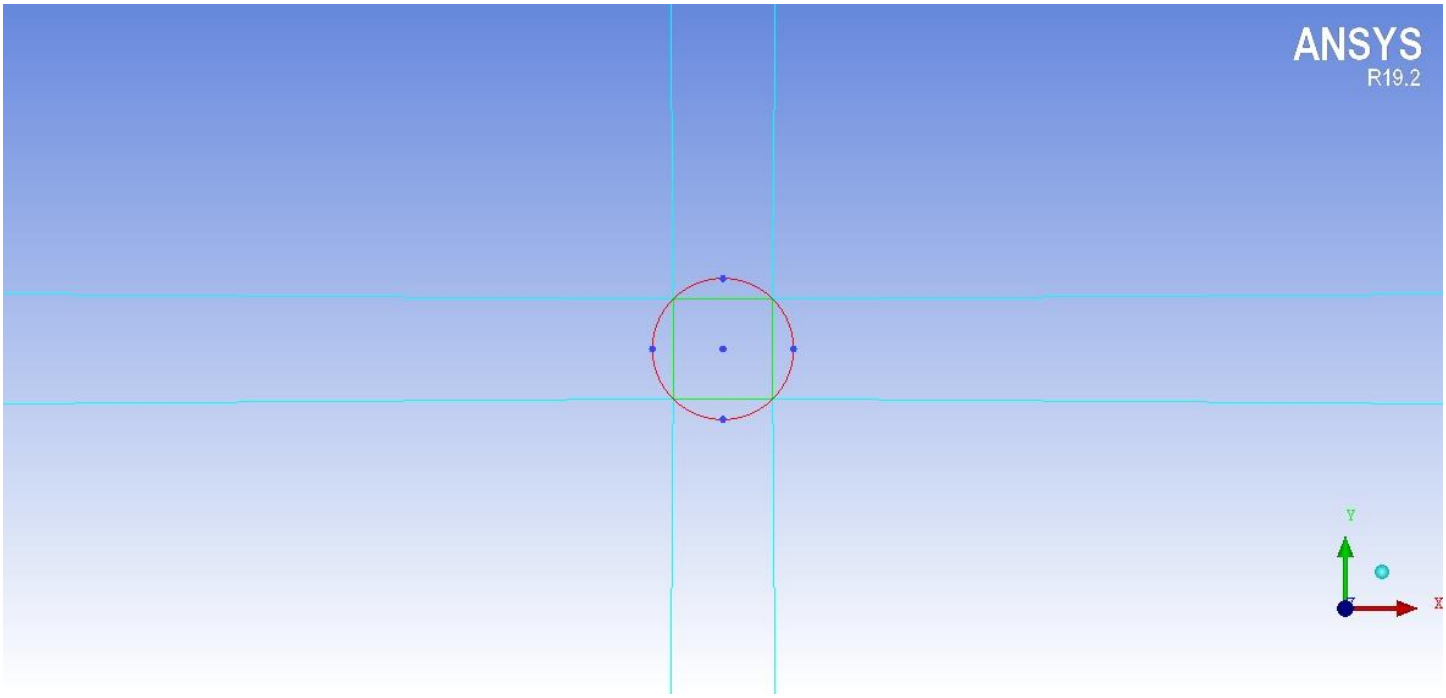

Zoom Viev

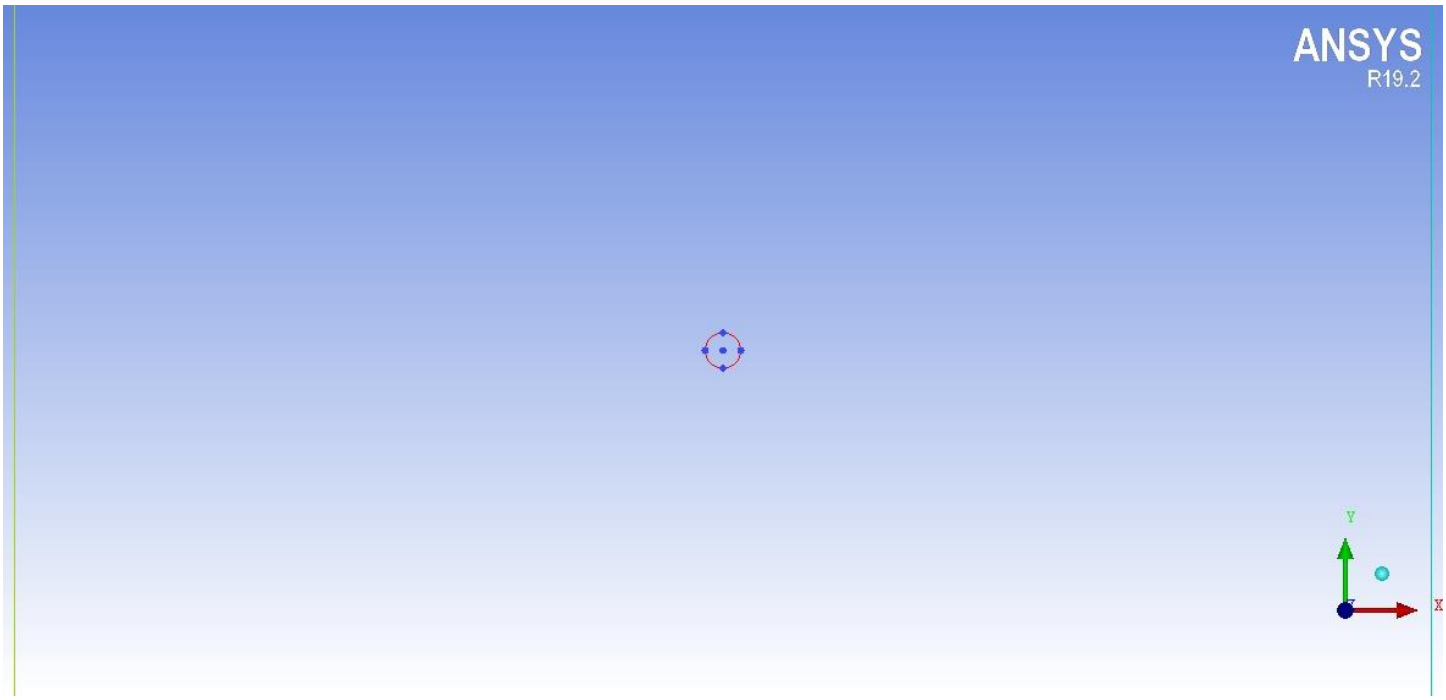

Center Surface

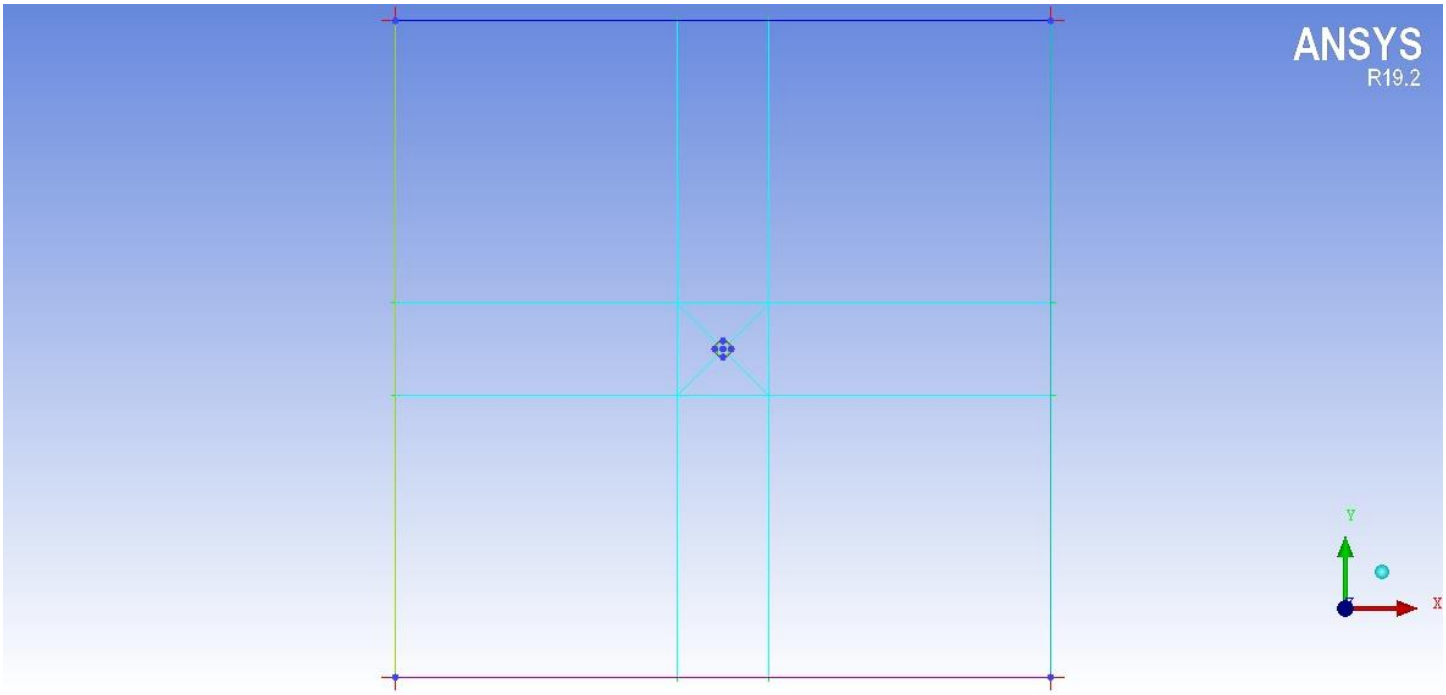

Vertices Association

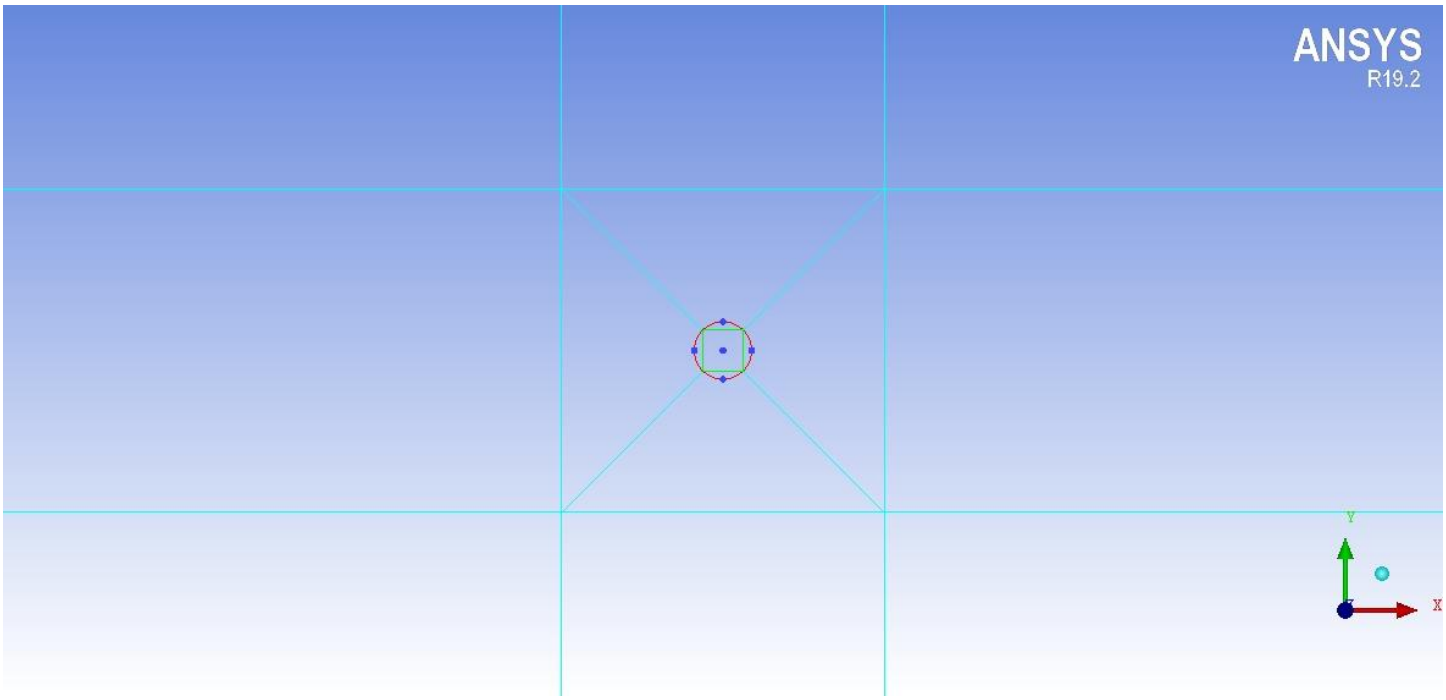

Zoom View Vertices Association

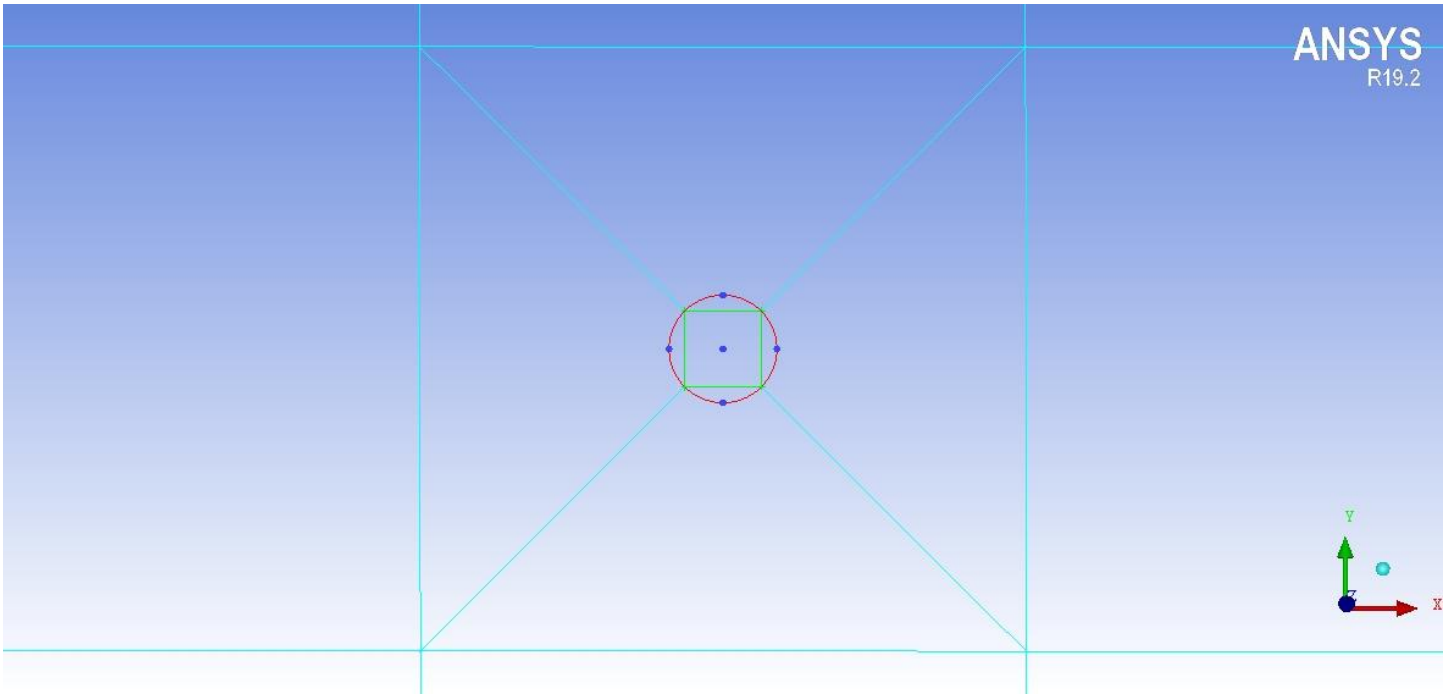

Center Zoom For Vertices

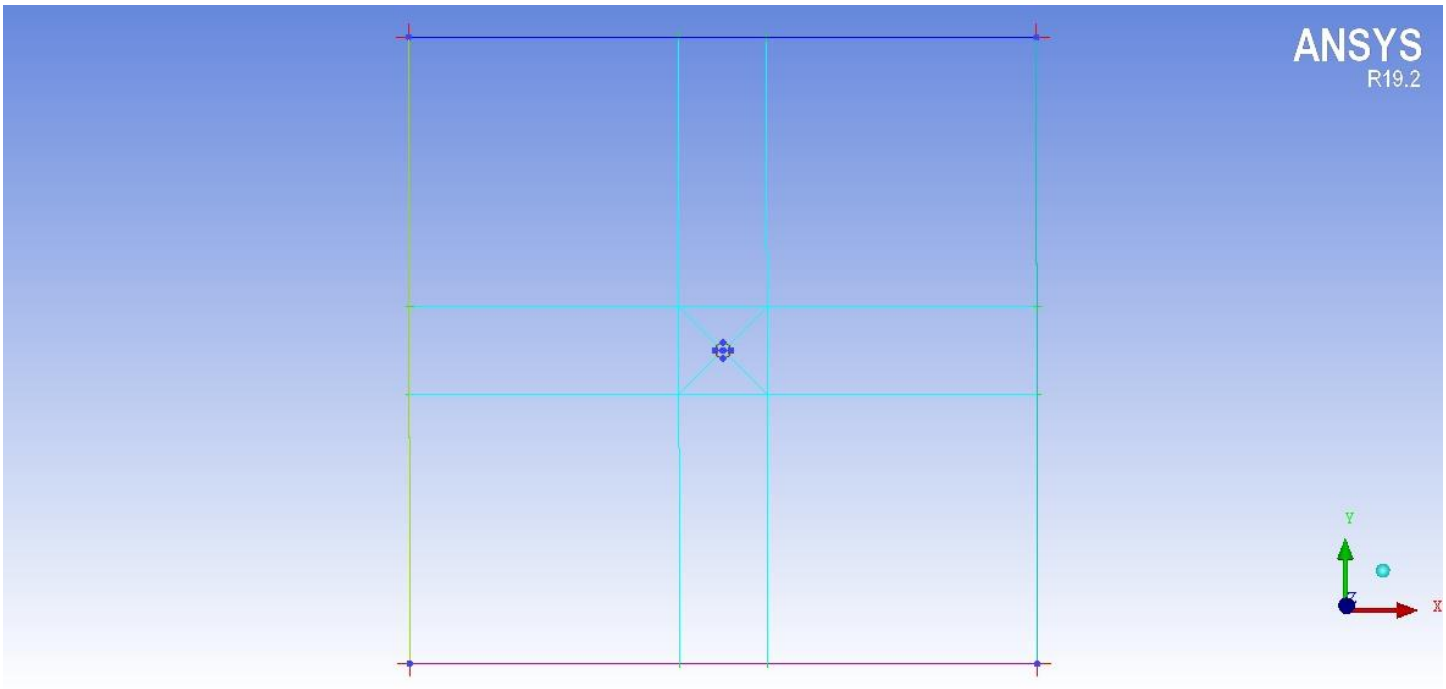

Curve With Initial blocking

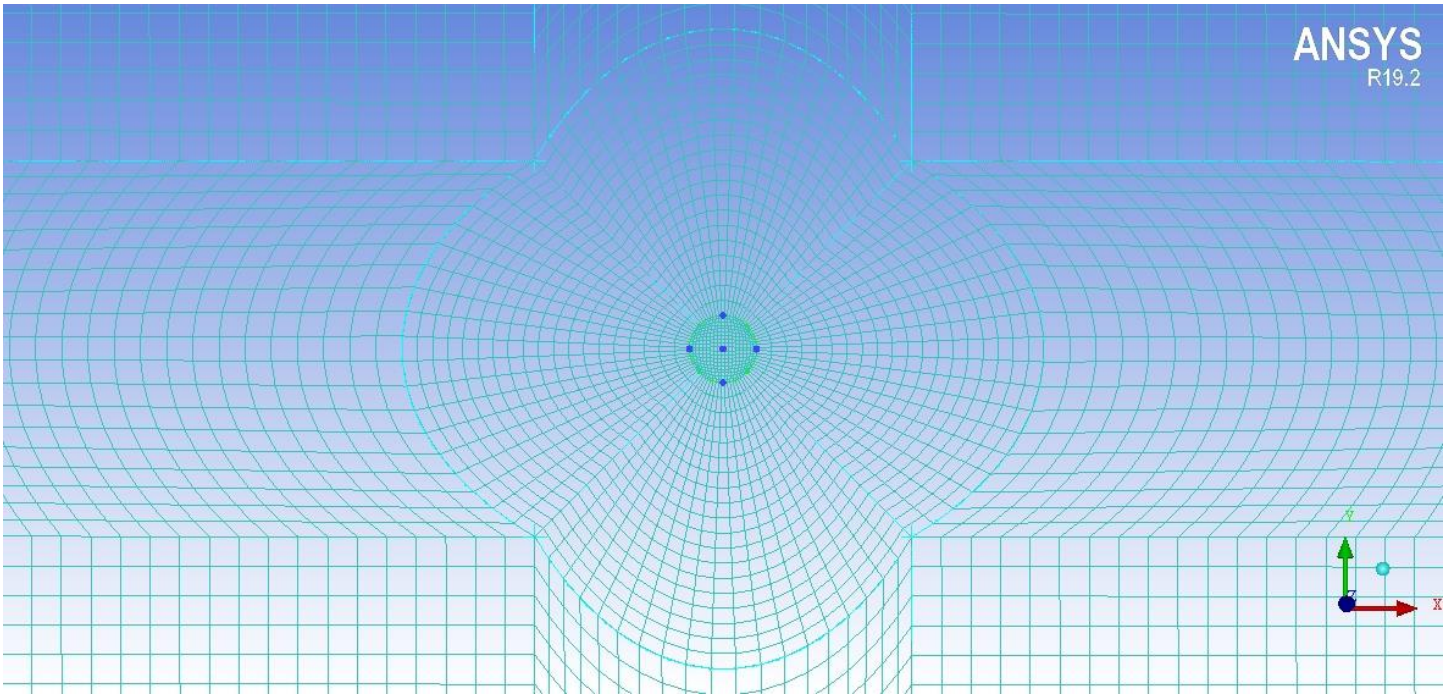

Meshing pre view

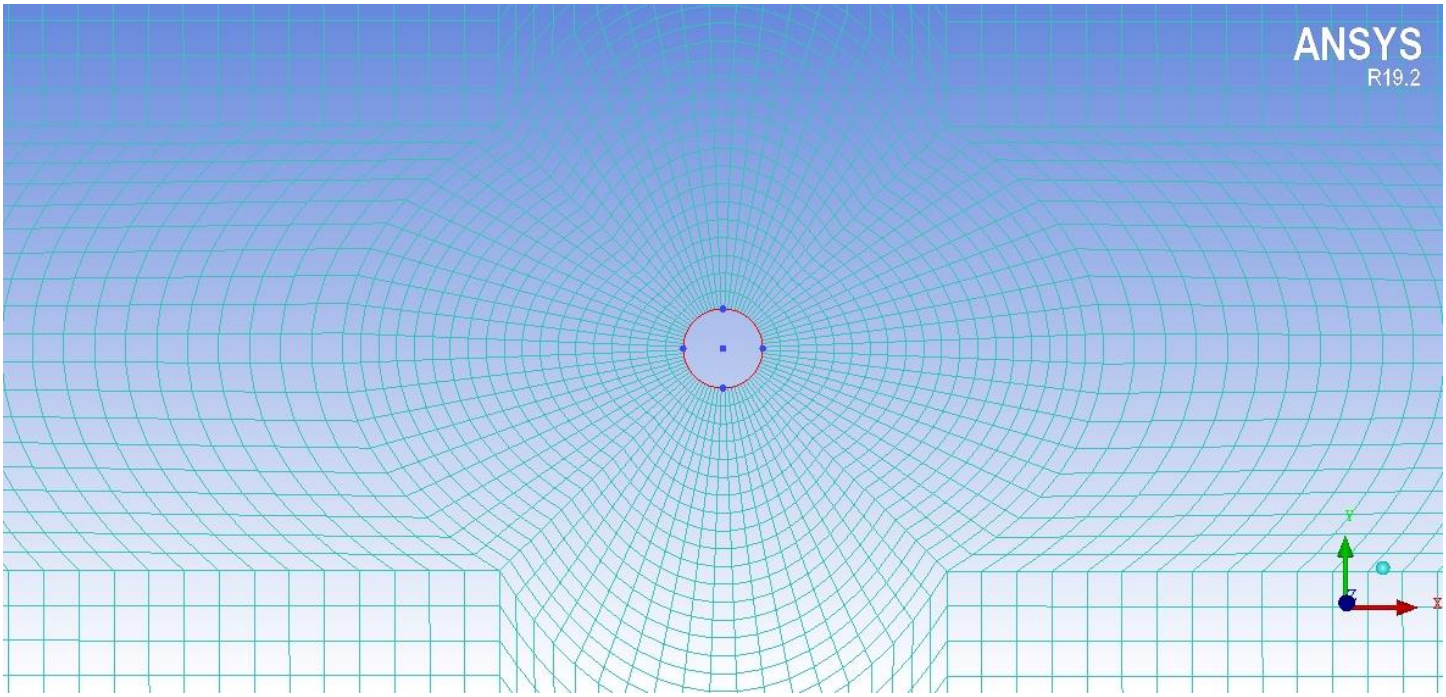

Without Center Surface

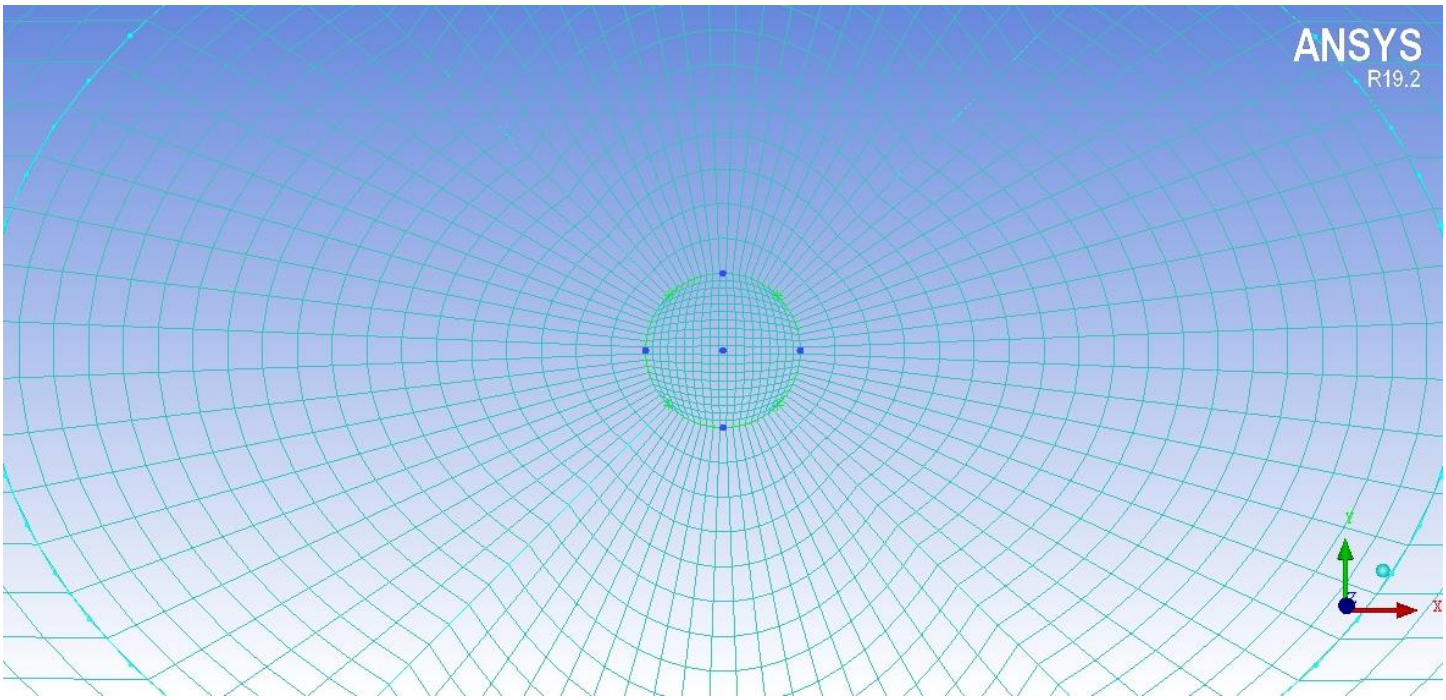

Zoom View

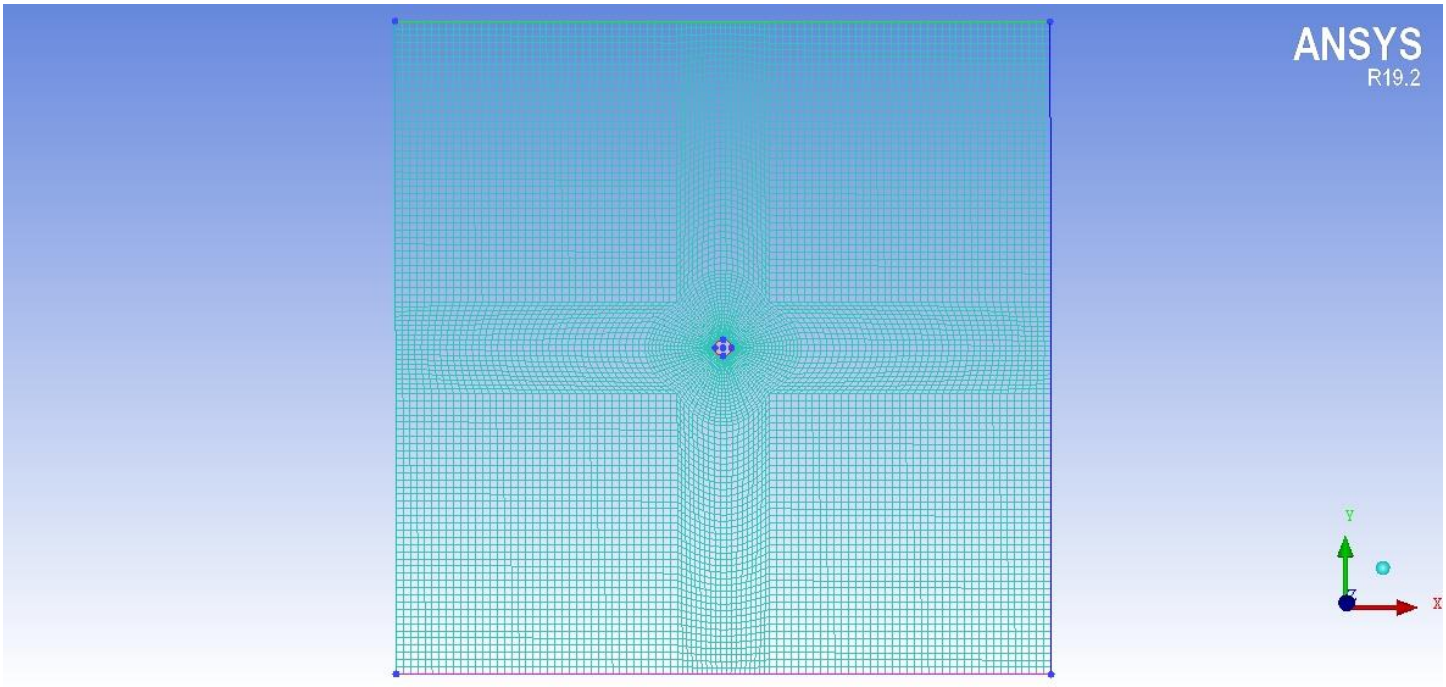

Fit To Scree Mesh View

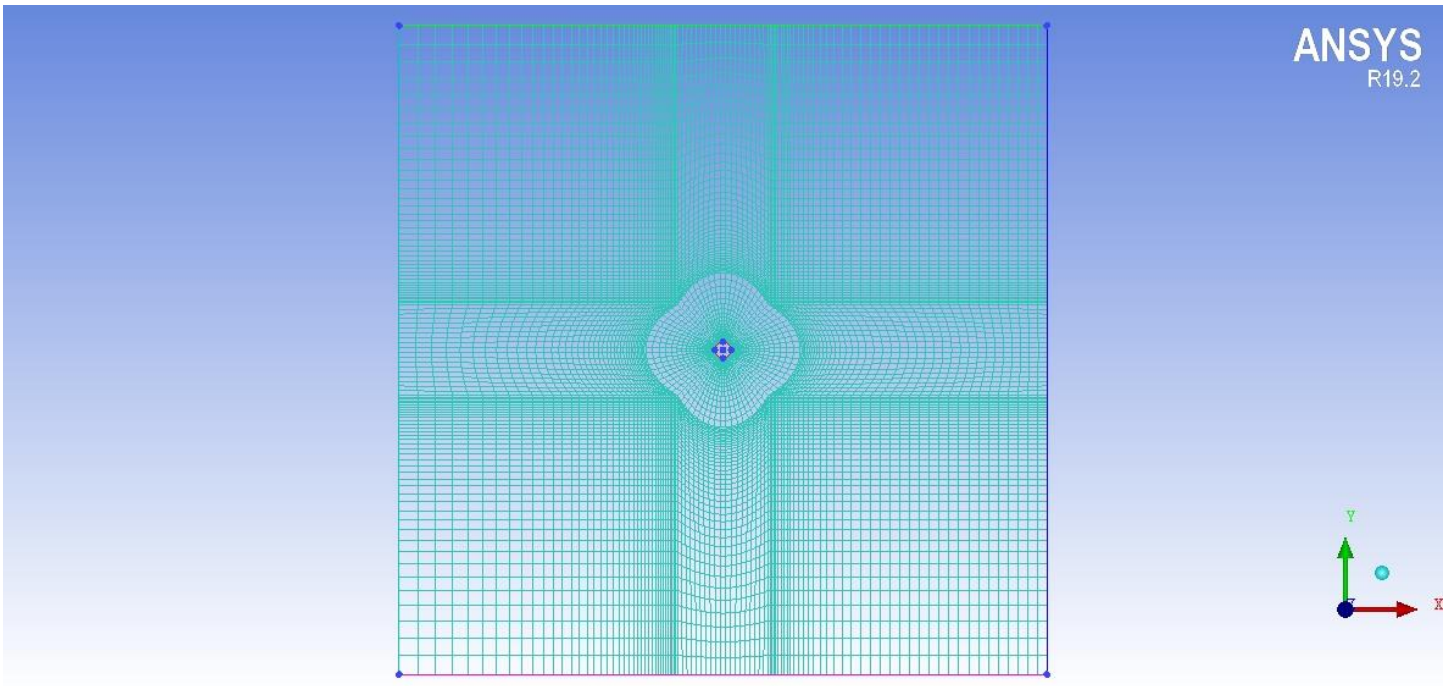

Final Meshing

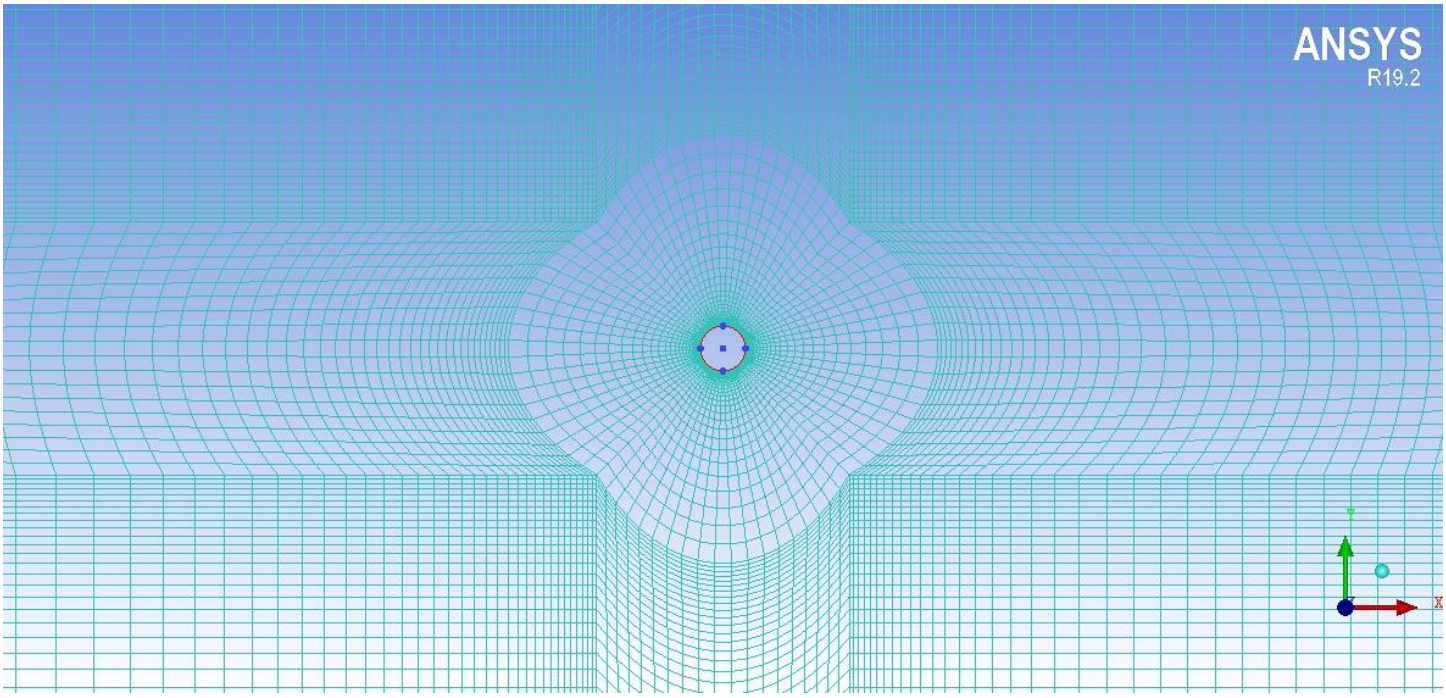

Final Meshing ZoomView

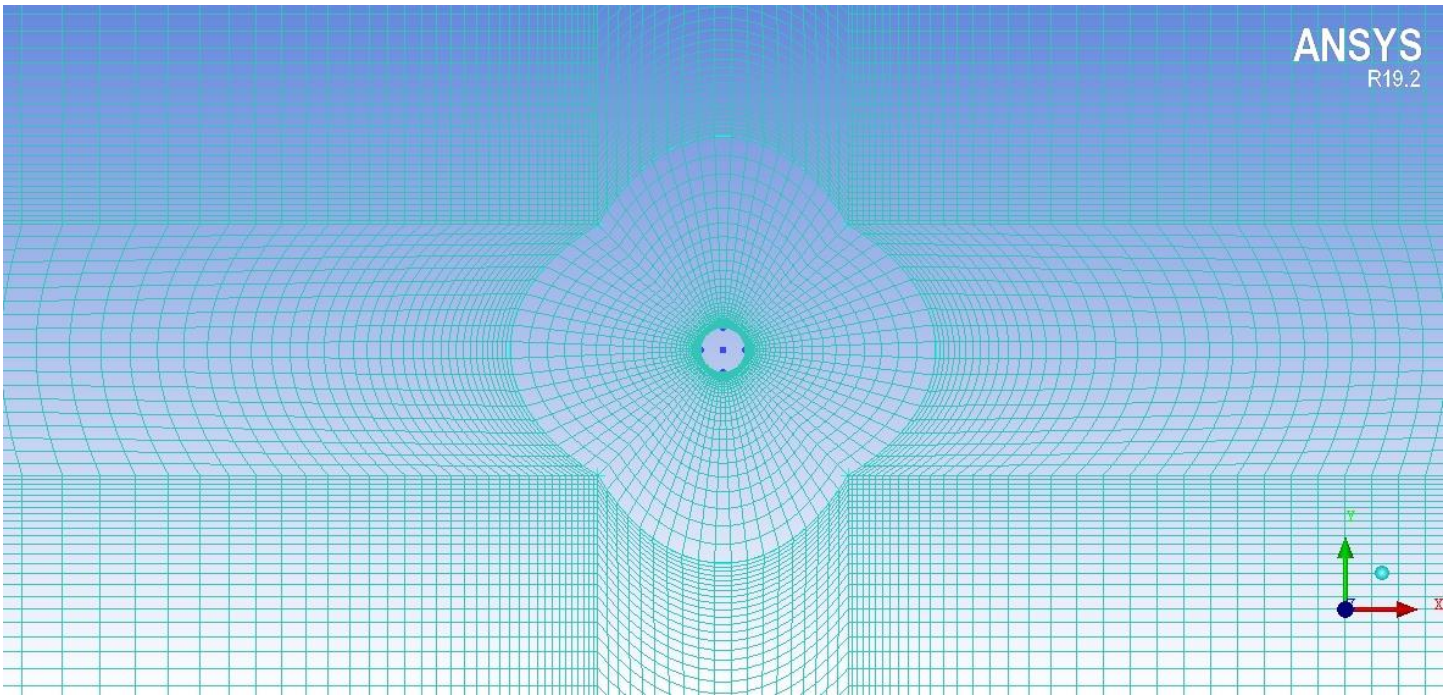

Meshing Center View